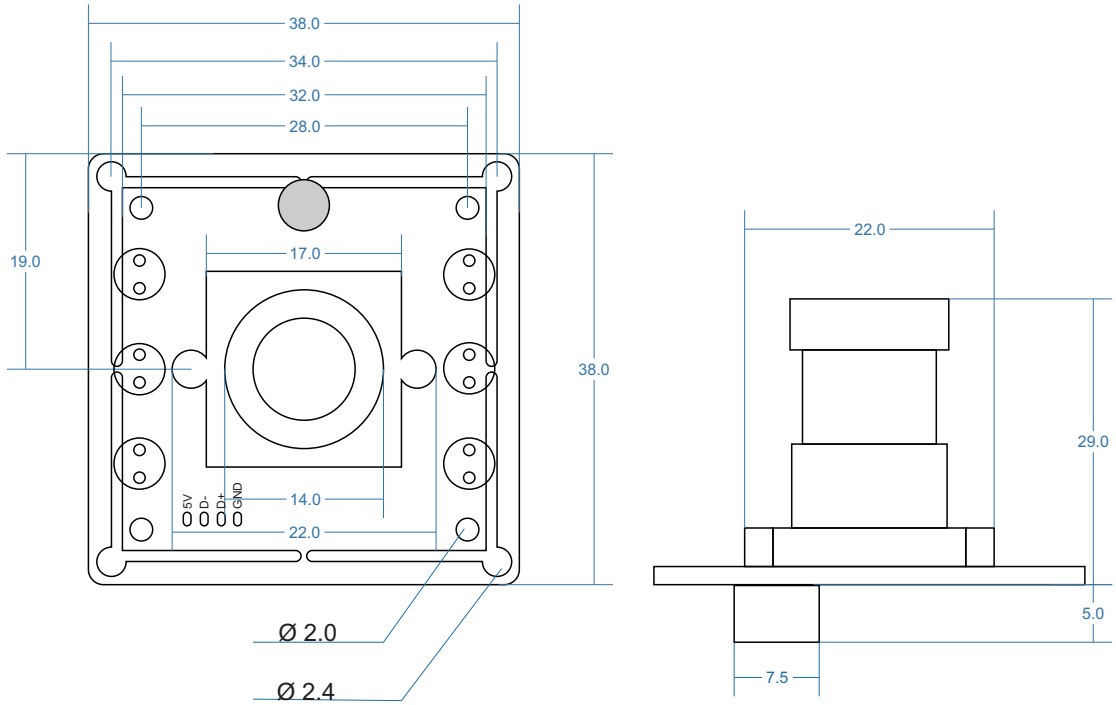

Date	2026/06/15	DELOCK we move the world	
Unit	mm	Item no.	96410
Projection	sketch	Title	USB 2.0 Camera Module with Global Shutter black / white 0.92 mega pixel 65° 6 LED V6 fix
Rev	A		
File No.	88251	Barcode	4043619964109