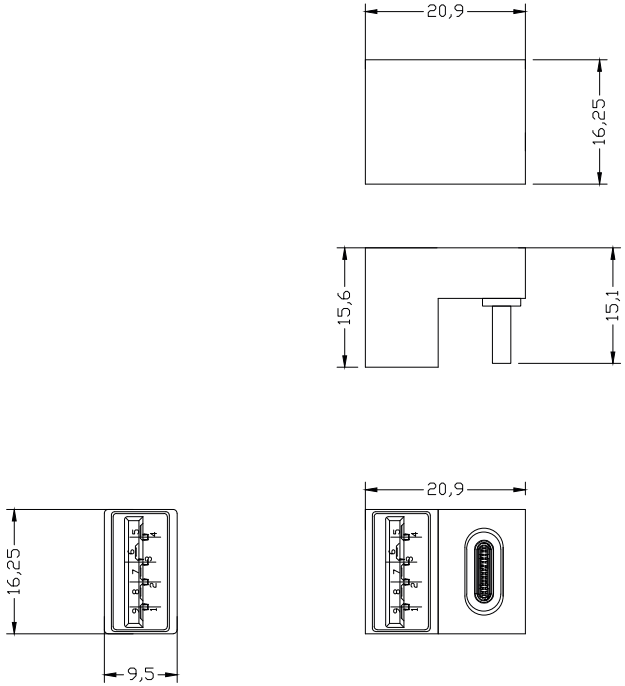

PIN ASSIGNMENT:

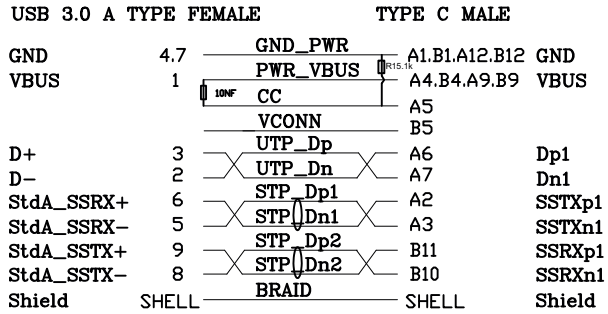

DELOCK®
we move the world

Date	2026 / 05 / 05		
Unit	mm	Item no.	67464
Projection	drawing	Title:	Adapter 10 Gbps USB Type-A male to Type-C™ male U-Shaped
Rev	A		
File No.	88367	EAN:	4043619674640